Wireless Telemetry for Industrial Applications

Sensors and Controls - '01

DOE/OIT

June 7, 2001

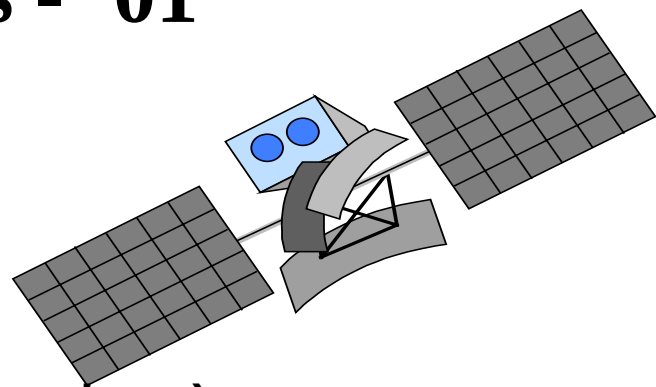

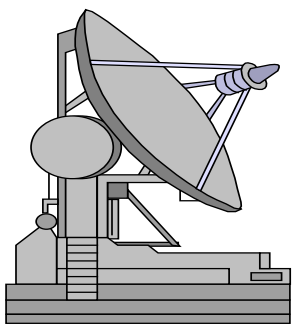

Wayne W. Manges (mangesww@ornl.gov)
Timothy J. McIntyre
Stephen F. Smith
Glenn O. Allgood
Michael R. Moore
Roberto Lenarduzzi

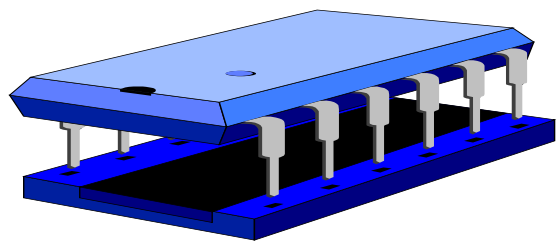

Http://orcmt.oakridge.org/wireless

OAK RIDGE NATIONAL LABORATORY
U. S. DEPARTMENT OF ENERGY

UT-BATTELLE

Our Third Year Demo Showed Feasibility

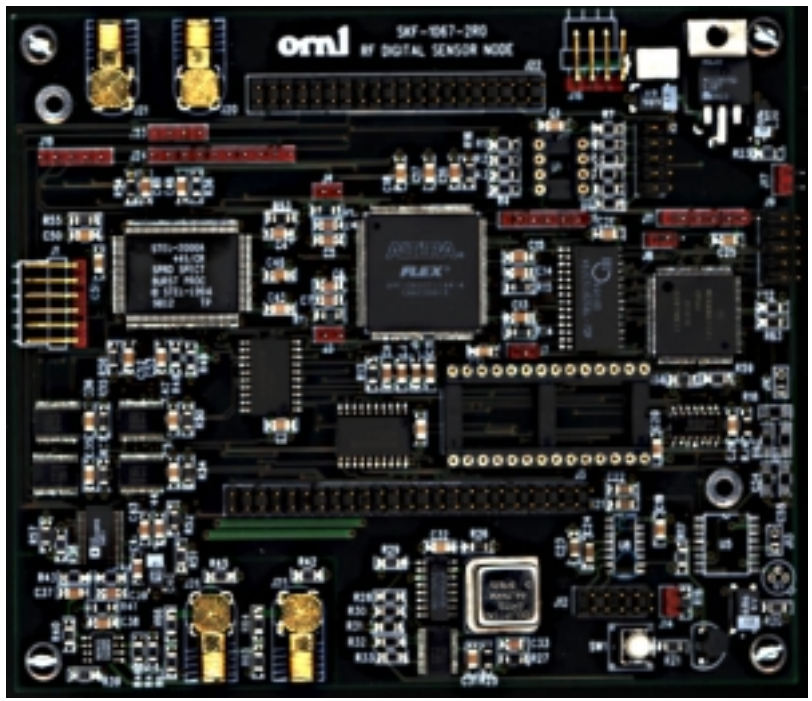

- Standards - IEEE 1451, Ethernet, 4-20ma
- Communication - Direct Sequence, Spread Spectrum, CDMA RF
- Robust - 140 feet in Bowater paper mill

We Accomplished What We Set Out To Do

- Year 1 - Functional Description and Requirements - some surprises, several external requests
- Year 2 - Architecture Specification, components - more external requests
- Year 3 - Integrated systems and Demo - external requests and potential partners

Challenges in Wireless Technology Identified by National Research Council

- **Eliminating Interference - reliable communications**
- **Developing Intelligent Wireless Sensors - reduced deployment cost**
- **Developing Robust Architectures - for harsh environments**
- **Developing Remote Power - long lasting and reliable**
- **Developing Standardized Protocols - plug-and-play (without the plug)**

Key Requirements Identified

- **Operate Unattended - Reduced cost of deployment and maintenance**
  - **self-configuring,**
  - **self starting,**
  - **self healing**
- **Support Legacy Systems - Sensors and networks, open standards (1451)**
- **Operate in Industrial Environment - temperature, dust, vibration**

Features Documented in Architecture Spec

- Architecture - DSSS, CDMA, peer-to-peer, hierarchical, dynamic
- Testbed - IEEE 1451 (Smart Sensor) compliant, Performance metrics established
- Path Forward - smaller footprint, higher performance, third-party support

DOE/OIT Board Level Wireless Test Bed

Overall System Block Diagram

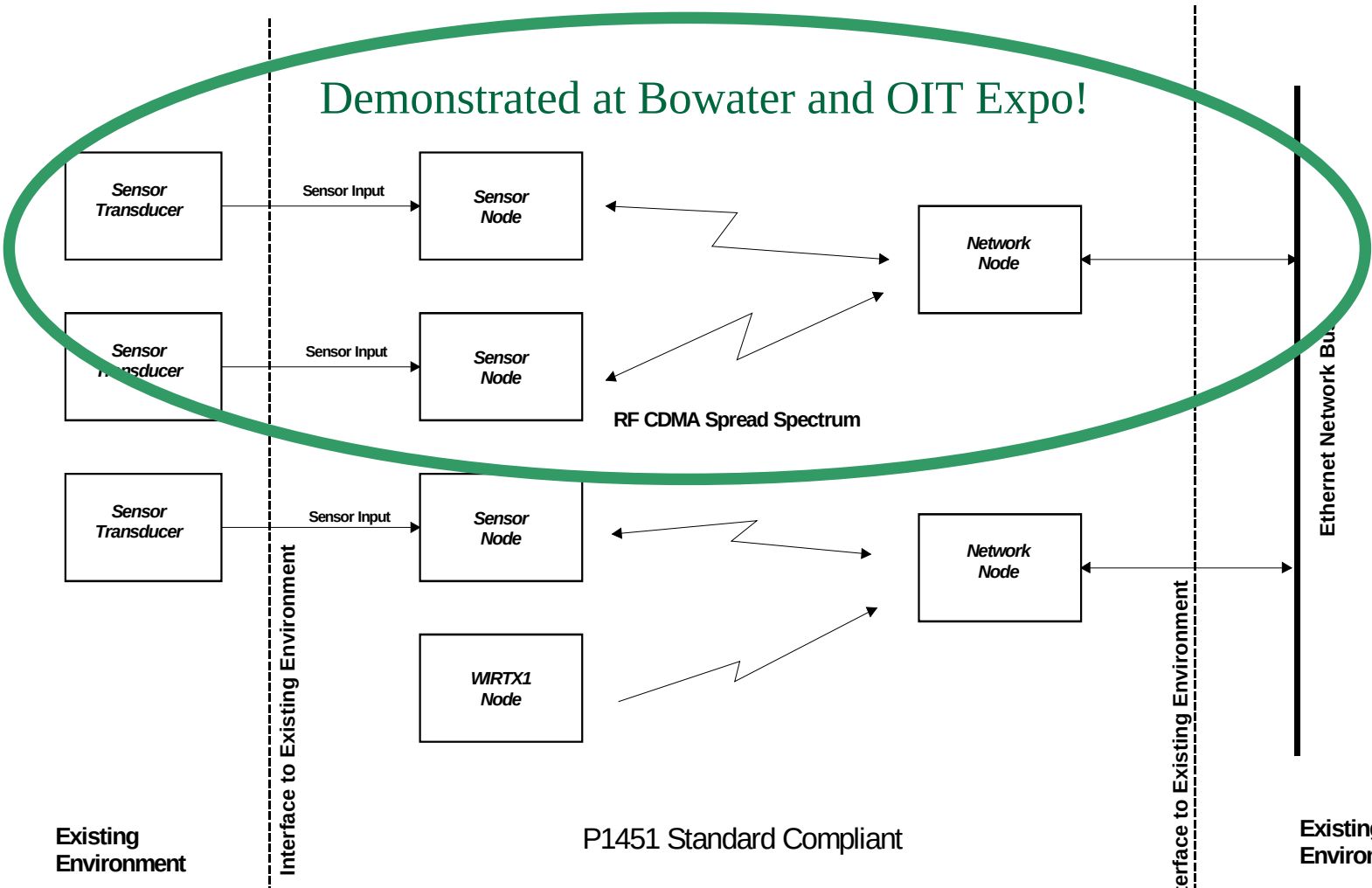

Architecture Designed For Miniaturization

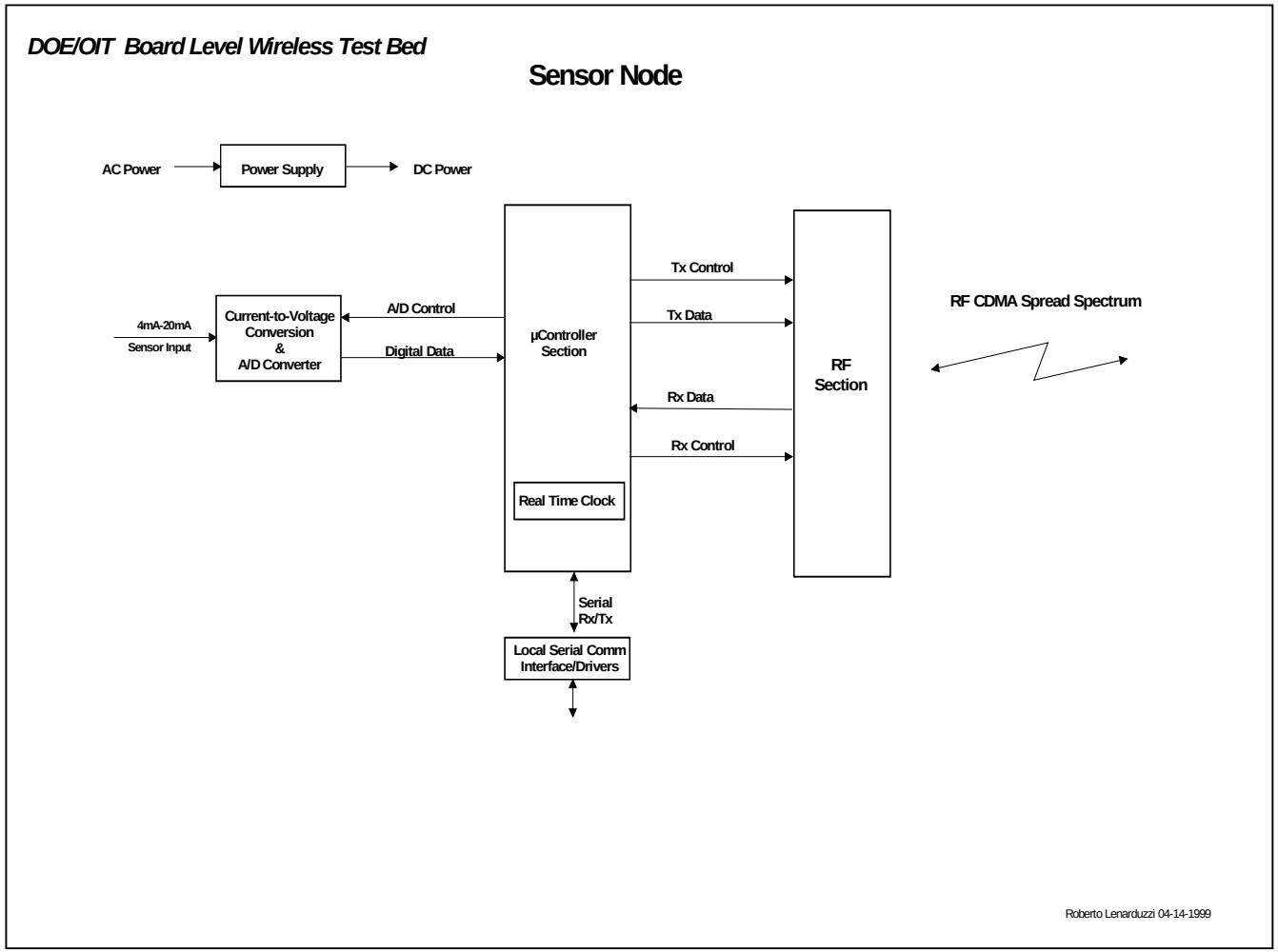

Measurement Provided to Existing Industrial Network

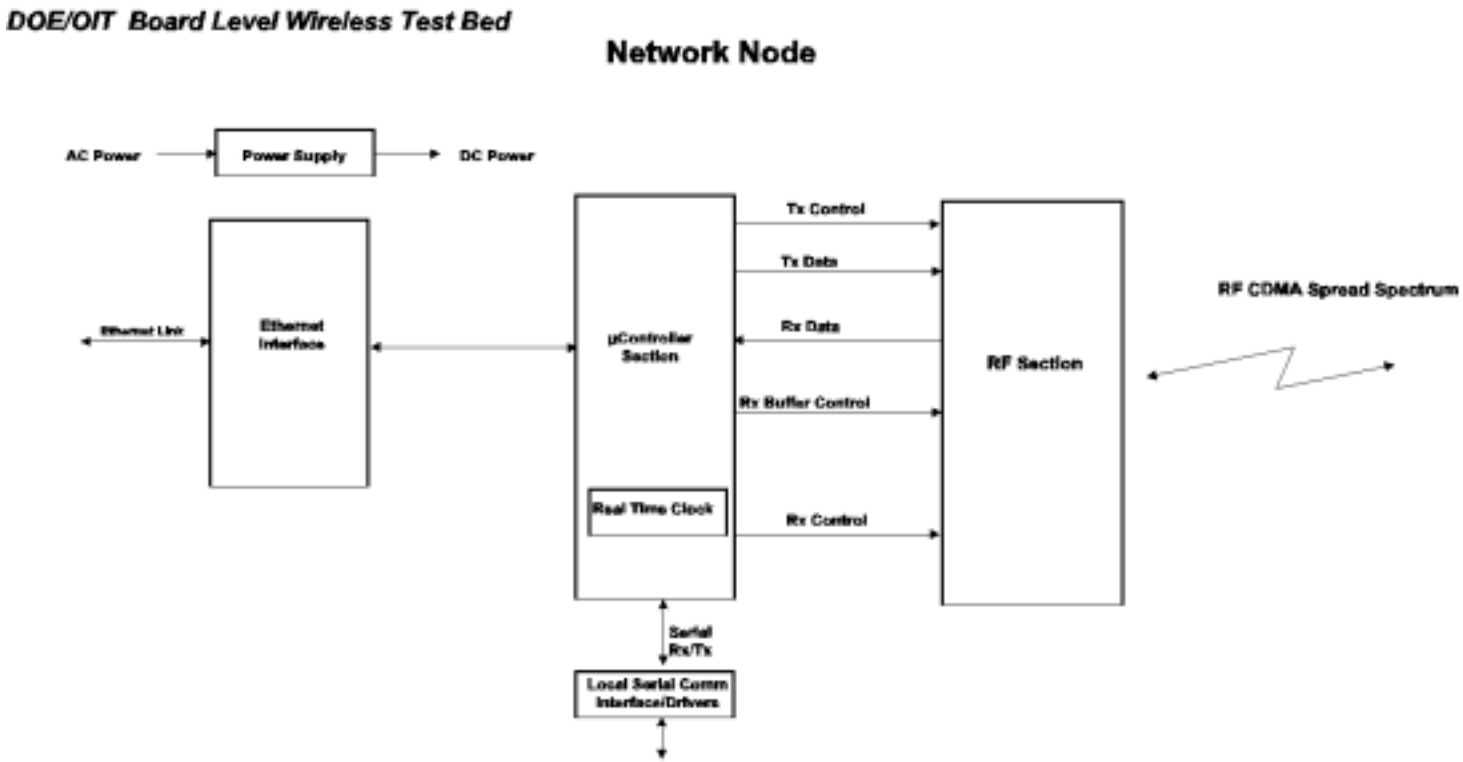

Modular Design For Reuse

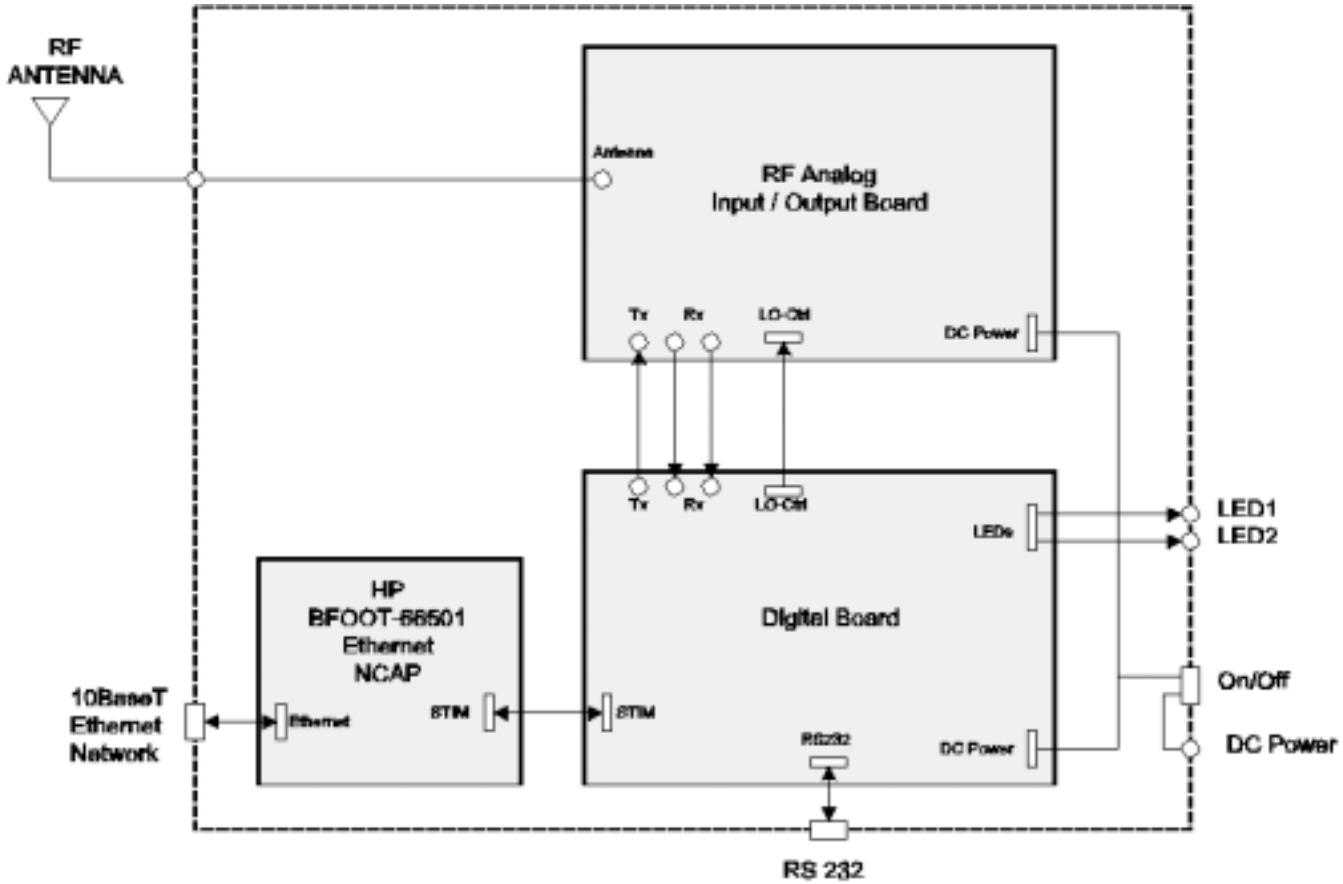

Network Node Box

Demonstration in Bowater Plant Proved Performance

- Robust - up to 140 feet in harsh environment
- Standards - 4-20ma standard pressure and temperature sensors, IEEE 1451 data structures, ethernet
- Throughput - updates suitable for real-time displays
- Low Power - 1/10000 power density of narrow band systems

- **Standards - IEEE 1451, Ethernet, 4-20ma**
- **Communication - Direct Sequence, Spread Spectrum, CDMA RF**
- **Robust - 140 feet in Bowater paper mill**

Connection Doesn't Require 100% Success

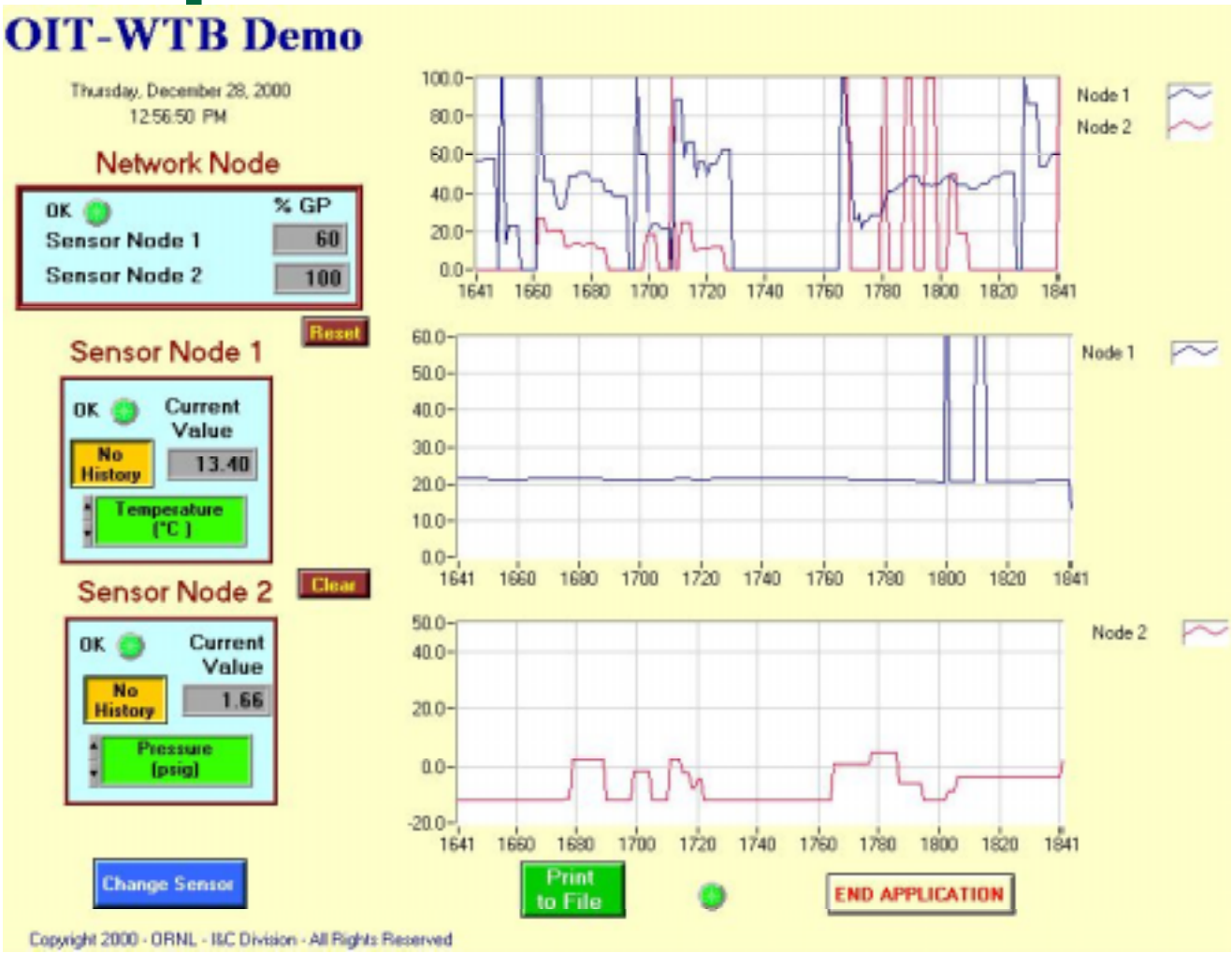

SiGe Work Begun on This Project

- AMS SiGe process has f_T up to 30 GHz, adequate for 5.8 GHz systems
- Two SiGe chips have been designed and submitted for fabrication
  - Individual devices for characterization and model verification
  - Several RF functional blocks needed for a 5.8 GHz bi-directional system

Wireless Program at ORNL Provided Significant Leverage

- LDRDs - wireless microsensors, embedded wireless biosensor - $1.5M
- Commercial Supplier - wireless MEMS - $4M
- Oil Industry - robust architecture - $1.5M
- Navy - Power management for wireless sensors - $555K
- NASA - launch vehicle status - $1M

Follow-on Projects Benefit

- Steel - Timken - wireless temperature of steel
- Pulp and Paper - wireless moisture sensor
- Defense Logistics Agency - wireless tags

Spread-Spectrum IEEE 1451.3 Protocol Demo

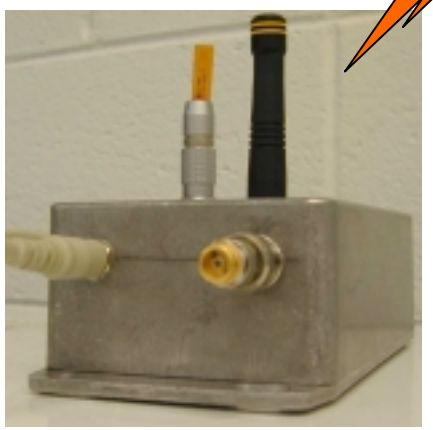

Closeup of Transceiver

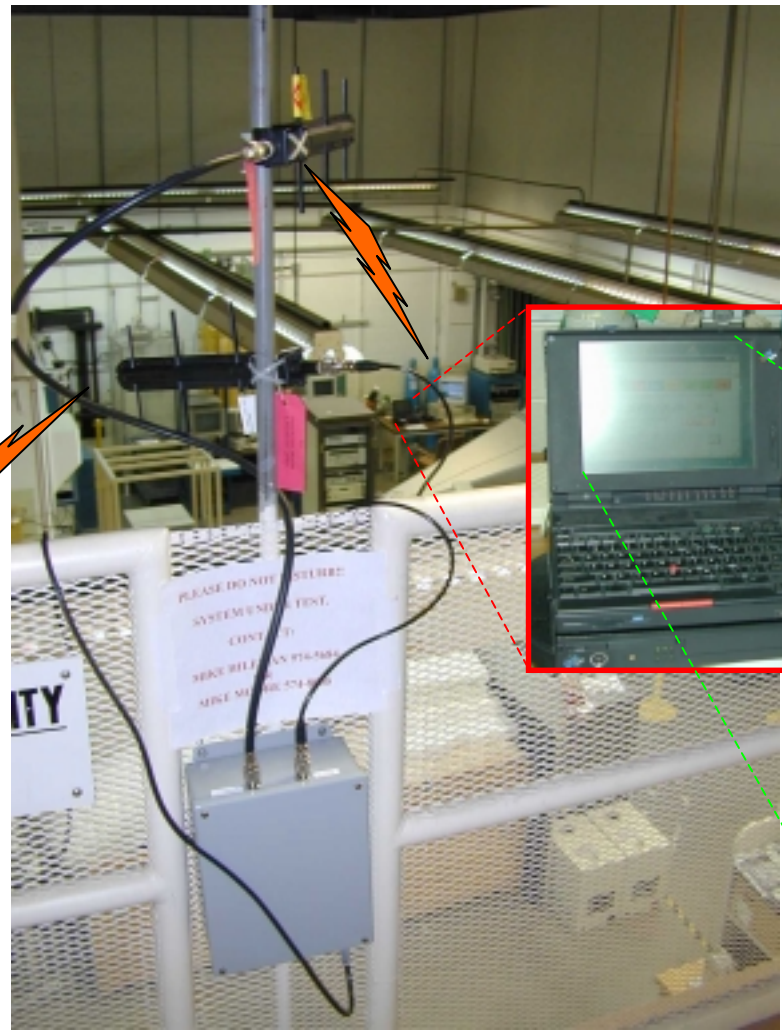

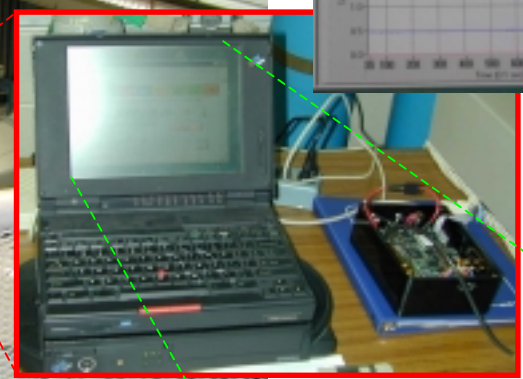

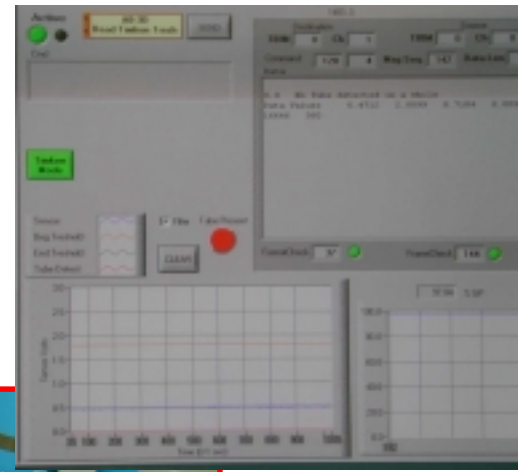

Data Screen

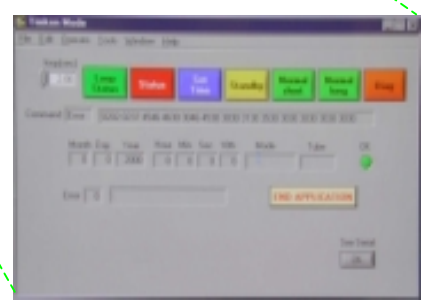

Control Screen

ORNL RF Test Site

Our Path is Clear

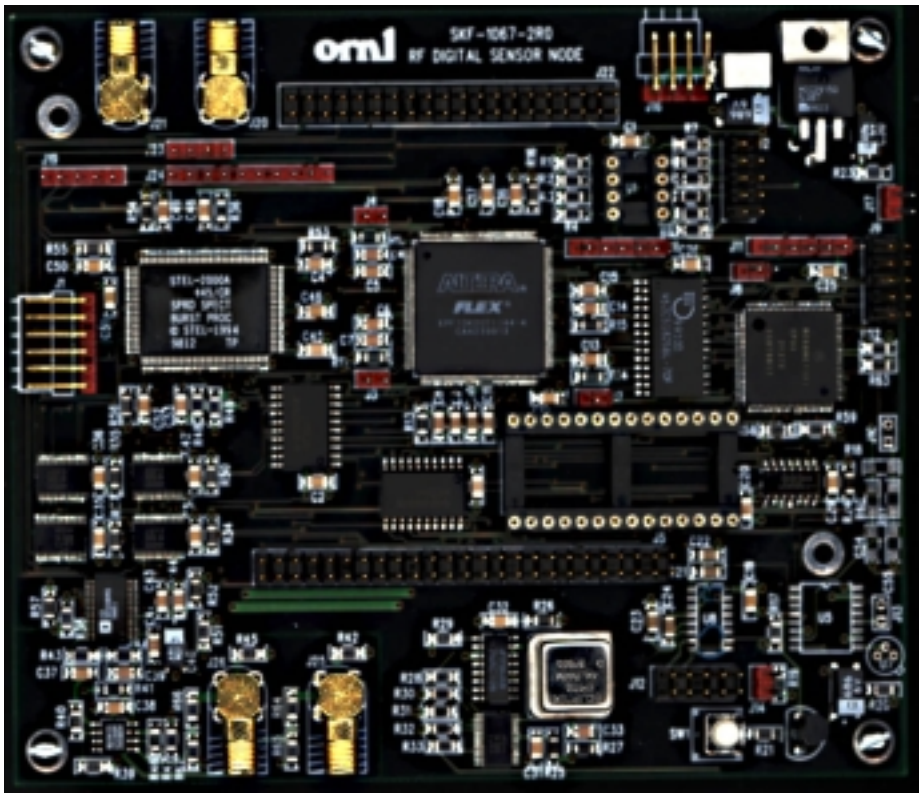

10 cm (4 inches)

Ground breaking work in:

- **Wireless protocols**
- **Mixed Signal ASICS**
- **Low Power Designs**

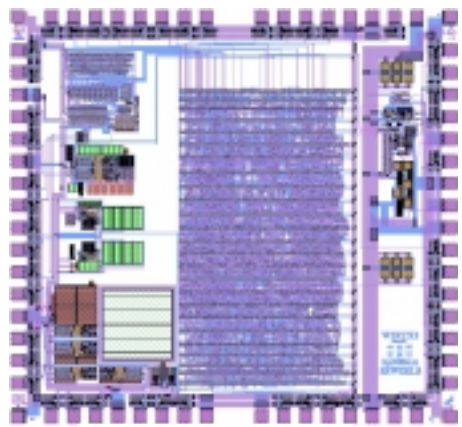

3.3 mm (1/8 inch)

Impact of Market Penetration Expected to Be Significant

- $15B per year business - wireless sensors and industrial communication
- $200 - $2000 per foot - wiring costs in industrial facilities
- Mobility and Agility - moving components can stay connected
- Safety/Compliance - personnel and emissions

Critical Next Steps Awaiting Funding and Partnerships

- **Self-Powered - harvesting, helium ion-based batteries**
- **Smaller Footprint, Improved Noise Immunity - SiGe ASICS**
- **Reliability - error detection/correction**
- **Embedded Intelligence - Sensor Agents**

Ready For Best Practices Call - Sign Up Now!

Our Project Highlighted in April 2000 Issue of Sensors Magazine

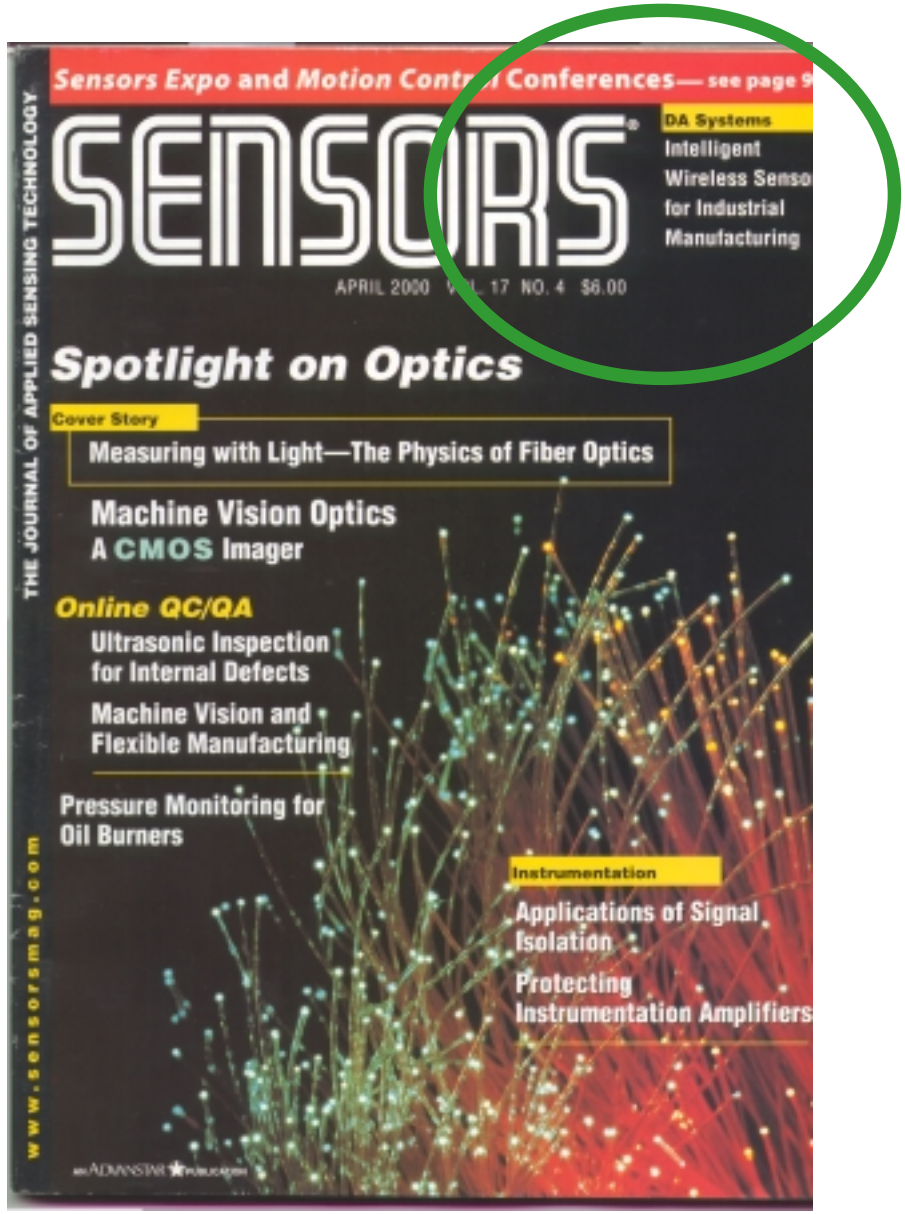

Follow-up Article in April 2001 Stressed Wireless Sensor Issues

The Future:
The Sensor IS the Network

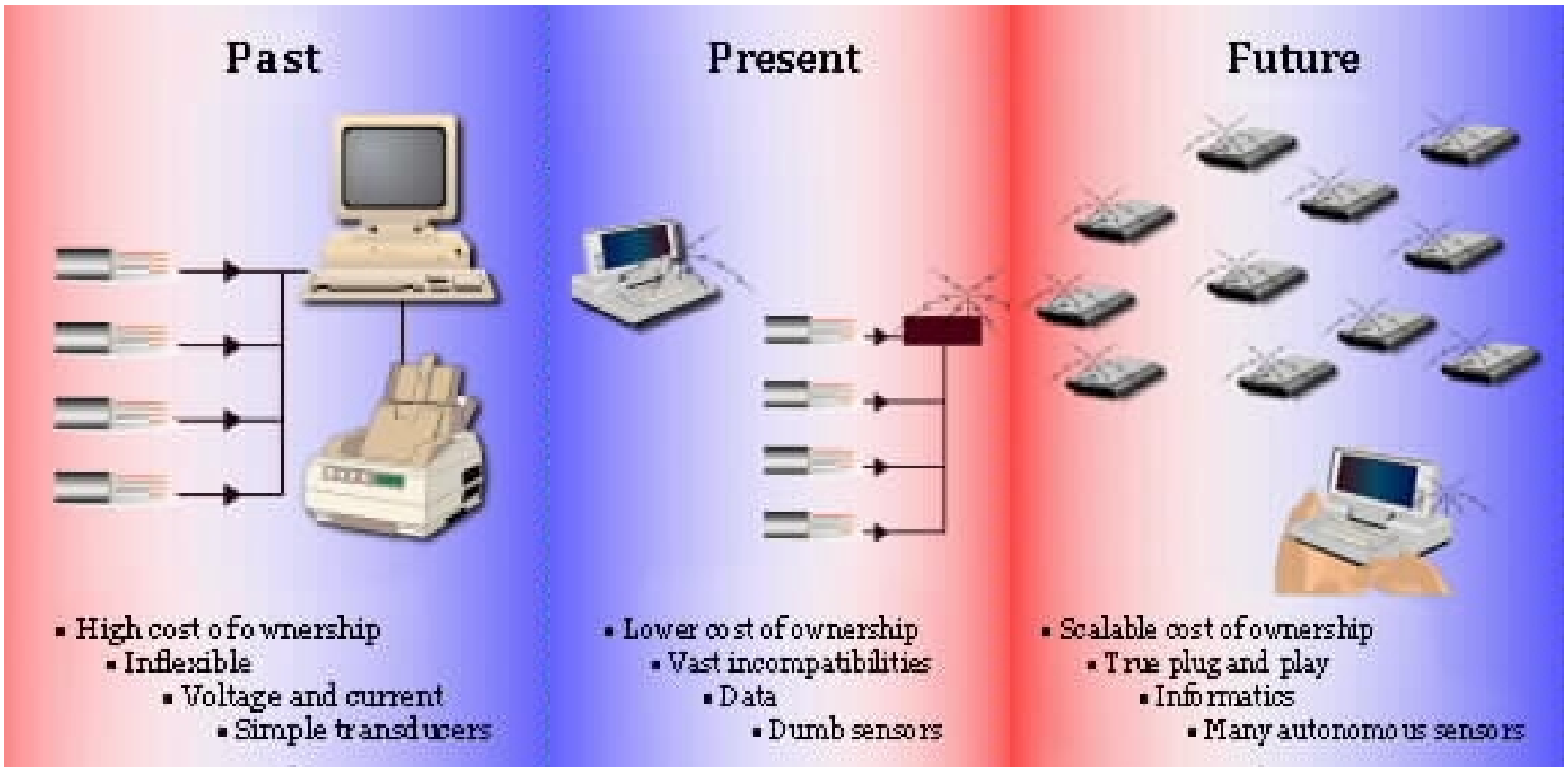

Embedding Classes of Functions for Information Abstraction

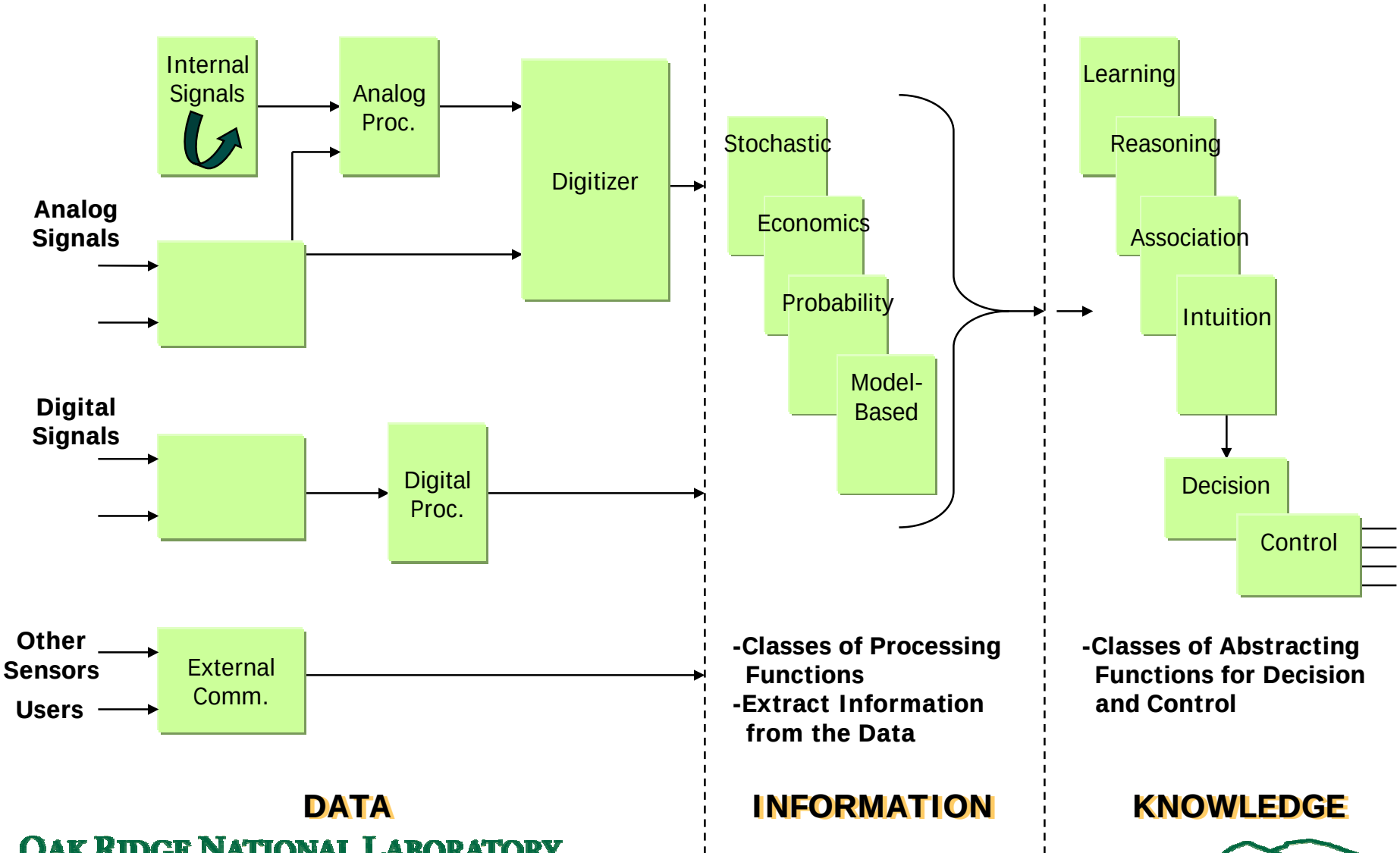

Project Successful - Work Continues as Funding Allows

- Demo - 140 feet but why not more?
- Power - wall power harder to get than expected - need power scavenging
- Size - need smaller size and internal antenna
- Partners - some in place, need more